Visions®

3500 Series with J-channel

Single Hung Windows

CROSS SECTION DETAILS

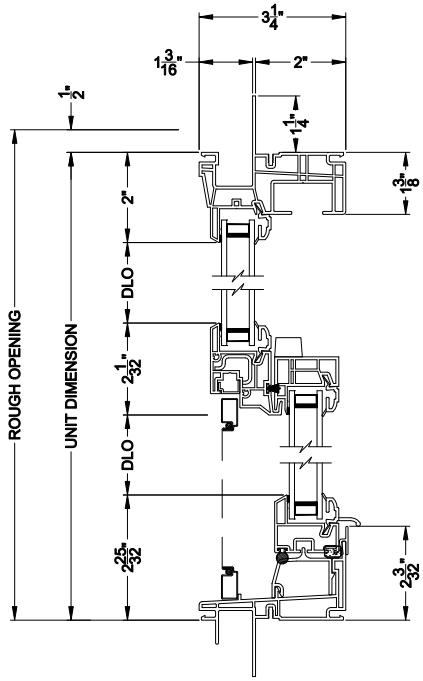

3500 SINGLE HUNG WINDOW (9109)
Vertical Section - DP50 upgrade

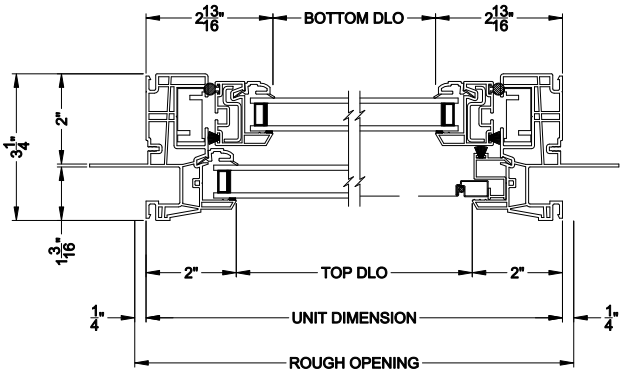

3500 SINGLE HUNG WINDOW (9109)
Horizontal Section - DP50 upgrade

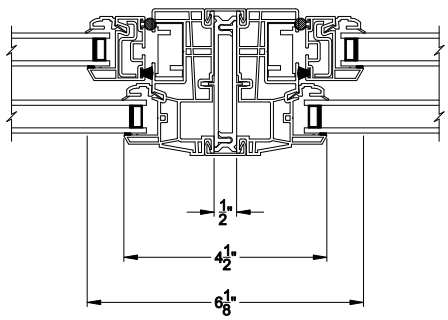

3500 SINGLE HUNG WINDOW
Aluminum Vertical Mull Section - SH / SH

Note: All dimensions are approximate. Visions reserves the right to change specifications without notice.